JETIR.ORG ISSN: 2349-5162 | ESTD Year : 2014 | Monthly Issue
JOURNAL OF EMERGING TECHNOLOGIES AND INNOVATIVE RESEARCH (JETIR)
An International Scholarly Open Access, Peer-reviewed, Refereed Journal

WIRELESS CAR CHARGING

Authors: Ankit Singh[1], Yogesh Prajapati [2], Vaseem[3], Vikas[4]
Guide: Mr. Sachin Kumar
College: IIMT College of Polytechnic, Greater Noida

ABSTRACT: Wireless power transmission (WPT) is popular and gaining technology chancing its operation in colorful fields. The power is transferred from a source to an electrical cargo without the need of interconnections. WPT is useful to power electrical bias where physical wiring isn't possible or inconvenient. The technology uses the principle of collective inductance. One of the future operations finds in automotive sector especially in Electric Vehicles. This paper deals with exploration and development of wireless charging systems for Electric vehicles using wireless transmission. The main thing is to transmit power using resonance coupling and to make the charging systems. The systems operates on AC source, transmission coil, event coil, motor and electric cargo which are battery.

Key words: Copper coils, battery, electromagnetic induction, inductive charging, Alternative current (AC), speed controller, Dynamo, electromagnetic fields.

INTRODUCTION:

We are going to design a Wireless EV Charging in which we will put a highly response Receiver in the EV Car, that moter will be set in a wheel we will put in the back wheel of that car, we will use a battery to store energy. We will use a speed controller to run the EV car that we have installed. The speed controller will be connected to our EV car when we use the wireless Equipments , at the time our battery will continue to charge. For charging we will install a Wireless or dynamo in back wheel, so that when our EV Parking, then our battery keeps charging.

Wireless charging is a technology that enables the charging of electronic devices without the need for physical cables or connectors. It utilizes electromagnetic fields to transfer energy between a charging station, often referred to as a wireless charger or charging pad, and a compatible device. Wireless charging relies on the principle of electromagnetic induction. The charging pad contains a coil that generates an alternating current, creating an oscillating magnetic field. When a compatible device with a receiver coil, such as a Smartphone or smart watch, is placed on the charging pad, the magnetic finduces an electric current in the receiver coil. This current is then converted into direct current (DC) to charge the device's battery. There are two main wireless charging standards in use today: Qi (pronounced "Chee") and Power mat. Qi, developed by the Wireless Power Consortium (WPC), is the most widely adopted and compatible standard. It is used by various devices, including Smartphone's, tablets, smart watches, and even some laptops. Power mat, developed by the Power Matters Alliance (PMA), is another standard but has seen less widespread adoption. Wireless charging offers several advantages. It eliminates the need for physical cables, reducing clutter and simplifying the charging process. It also provides convenience, as you can simply place your device on the charging pad rather than plugging it in.

Additionally, wireless charging reduces wear and tear on charging ports, which can extend the lifespan of devices. It's worth noting that wireless charging is not as efficient as traditional wired charging methods. Some energy is lost during the transfer process, and charging speeds may be slower compared to wired connections. However, wireless charging technology continues to advance, and newer iterations offer improved efficiency and faster charging speeds. Overall, wireless charging provides a convenient and cable-free method of charging compatible electronic devices.

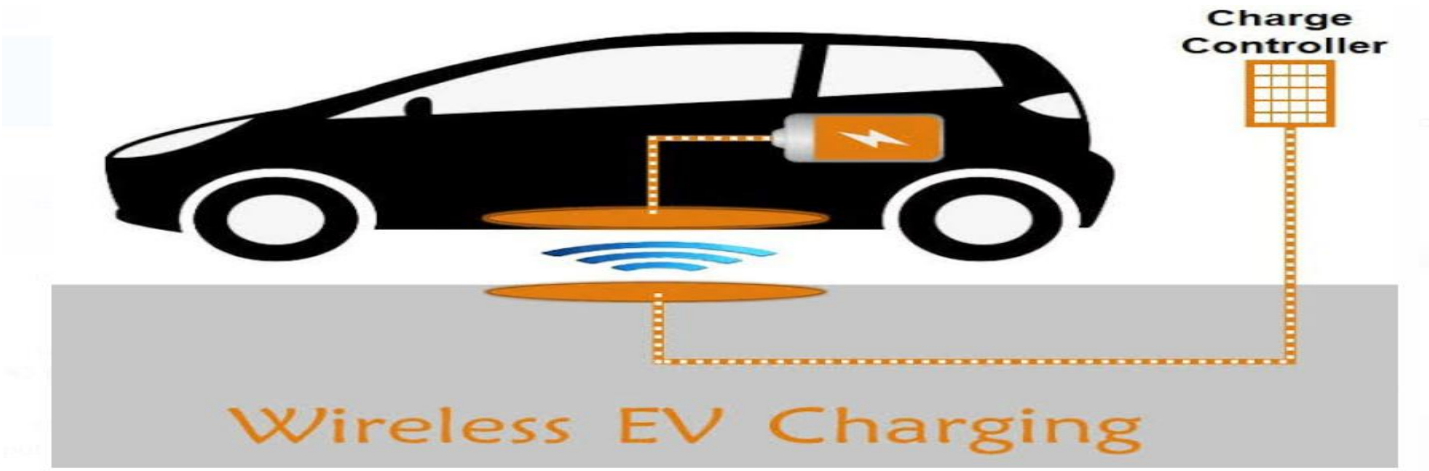

Circuit Diagram

make all the connection as the given in the circuit diagram.

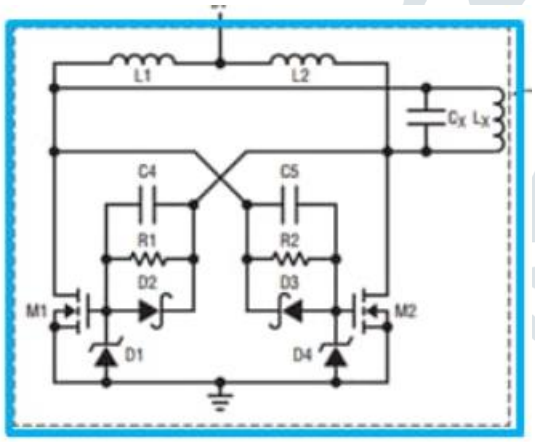

What is the wireless charging:

Wireless charging is one of the several methods of charging batteries without the use of cable or device specific AC adaptors. Bottom of Form Wireless charging can be used for a wide variety of devices including cell phones laptop computers and MP3 players as well as larger objects such as cars.

Resonance charging:

Resonance charging, also known as resonant wireless charging, is a variant of wireless charging that utilizes the concept of electromagnetic resonance to transfer power between a charging pad and a device. While traditional wireless charging (inductive charging) requires precise alignment between the charging pad and the device, resonance charging offers a more flexible and forgiving charging experience.

In resonant wireless charging, both the charging pad and the device are equipped with resonant coils tuned to the same frequency. When placed in proximity to each other, the coils establish resonance, which allows for efficient power transfer over a greater distance and with less sensitivity to misalignment.

The resonance charging system typically consists of a power transmitter (charging pad) and a power receiver (device). The transmitter generates an alternating current (AC) that is sent to the transmitter coil, creating an oscillating magnetic field. The receiver coil in the device picks up the magnetic field and converts it back into an electrical current, which charges the device's battery.

MAKING OF WIRELESS CHARGER:

Transmitter

1. A power transmitter acts as a power source.
2. It will transmit power to the receiver side.
3. The transmission signals are mainly in between
4. The RF/ Microwave range. (Typically 900Mhz)

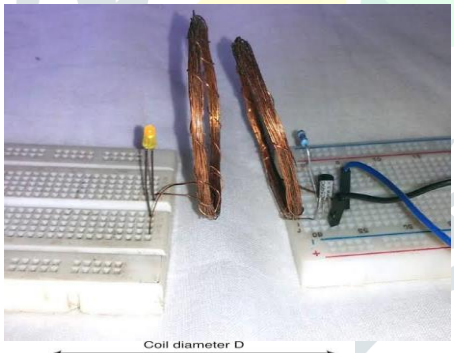

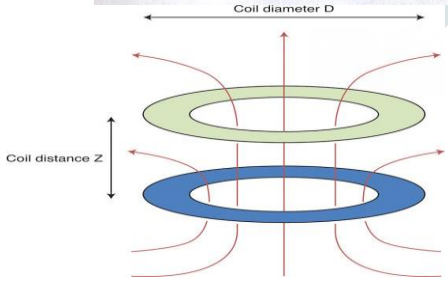

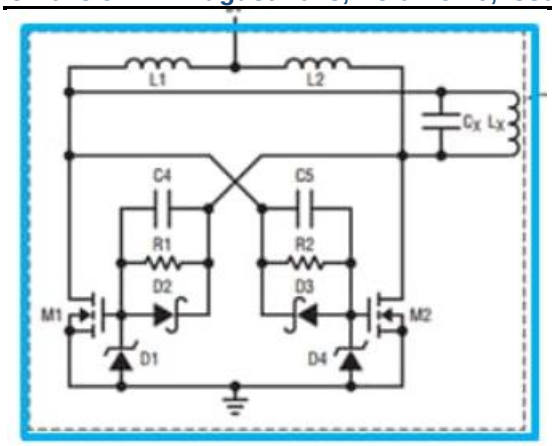

Important specifications:

1.Impedance of antenna.

A full-wave rectifier ckt is used because of its simplicity and efficiency in converting A.C signal.At the o/p of the rectifier, the signal is not a D.C signal yet. Thus by adding a capacitor and a resistor a smooth o/p can be achieved.

Benefits:

- Provides consumers with freedom and convenience.
- The way the technology works is simple. Simultaneous charging of multiple devices.
- The plastic, packaging & electronic waste associated with charges is greatly reduced.
- Since it is wireless it is economic

CONCLUSION:

Exploration in to using wireless technology to supply to outstations is eventually beginning to be realized. The technology provides a range of other egregious benefits, including better portability, lower cost and stylish of all the end of having to guess which bowl go what widgets. Charging will one day come a simple matter of dropping bias into the nearest charging pad.

REFERENCES:

[1] http://www.sae.org.

(2)http://www.witricity.com/applications/automotive.

[3] S. Bhattacharya and Y.K. Tan. 2012. Design of static wireless charging coils for integration into electric vehicle, Proc. IEEE ICSET, Nepal. https://doi.org/10. 1109/icset.2012.6357389.

[4] X. Mou and H. Sun. 2015. Wireless power transfer: survey and roadmap, Proc. IEEE 81st Vehicular Tech. Conf., Glasgow, UK. https://doi.org/10.1109/vtcspring. 2015.7146165.

[5] M. Cederl. 2012. Inductive Charging of Electrical Vehicles, Master Thesis, Stockholm, Sweden.

[6] M.T. Thompson. 1999. Inductive Calculation Techniques - Part II Approximations and Handbook Methods Power Control and Intelligent Motion.

[7] http://www.ansys.com.

[8] P.S. Sniak. 2013. Three-Phase AC–AC Power Converters Based on Matrix Converter Topology, Power Systems, Springer-Verlag, London. https://doi.org/10.1007/978-1-4471-4896-8_2.

[9] M.B. Shamseh, A. Kawamura, I. Yuzurihara and A. Takayanagi. 2014. A wireless power transfer system optimized for high efficiency and high power applications, Proc. 7th Int. Power Electronics Conf.,Hiroshima, Japan.