JETIR.ORG ISSN: 2349-5162 | ESTD Year : 2014 | Monthly Issue
JOURNAL OF EMERGING TECHNOLOGIES AND INNOVATIVE RESEARCH (JETIR)
An International Scholarly Open Access, Peer-reviewed, Refereed Journal

Optimized Energy Storage System for Enhanced EV Performance

[1]Sandeep Kumar, [2]Dr. Ashish Kumar Rai
[1]PhD Scholar, [2]Professor
Electrical and Electronics Engineering,
LNCT University Bhopal, India
sandeepk@lnct.ac.in, ashishkr@lnctu.ac.in

***Abstract*— This research presents an optimized Hybrid Energy Storage System (HESS) that integrates Lithium-Ion Batteries (LIBs) with Supercapacitors (SCs) to enhance the performance, efficiency, and reliability of Electric Vehicles (EVs). The proposed system leverages the high energy density of LIBs and the rapid charge-discharge capabilities of SCs to meet dynamic power demands during acceleration, regenerative braking, and cruising. An intelligent Energy Management System (EMS) is designed to dynamically allocate power between the two storage units based on real-time driving conditions. Simulation results demonstrate significant improvements in energy utilization, acceleration response, and battery lifespan, indicating the effectiveness of the hybrid system in overcoming the limitations of traditional single-source energy storage in EVs.**

***Keywords*— HESS, Electric Vehicles, Lithium-Ion Battery, Supercapacitor, Energy Management System.**

I. INTRODUCTION

The global transportation sector is undergoing a transformative shift toward sustainable and energy-efficient alternatives, with Electric Vehicles (EVs) emerging as a vital solution to mitigate greenhouse gas emissions, reduce fossil fuel dependency, and promote environmental sustainability. As governments and industries across the globe continue to implement policies supporting the adoption of EVs, research and development in this domain are gaining unprecedented momentum [1]. However, one of the primary challenges hampering the widespread adoption of EVs is the limitation of conventional energy storage systems, which directly impacts vehicle performance, driving range, charging time, and overall reliability [2].

Traditional EVs predominantly rely on Lithium-Ion Batteries (LIBs) due to their high energy density, mature technology, and declining manufacturing costs. While LIBs offer several advantages, they suffer from limitations such as poor power density, thermal instability, and shorter cycle life under high current loads—particularly during acceleration, hill climbing, and regenerative braking. These constraints lead to performance degradation over time and raise concerns regarding safety and cost-efficiency. Consequently, improving the energy storage system in EVs has become a critical area of research for enhancing performance and consumer acceptance [3].

To address these challenges, the concept of a Hybrid Energy Storage System (HESS) has emerged as a promising alternative. HESS integrates batteries with high energy density and supercapacitors (SCs) with high power density, aiming to combine the strengths of both technologies [4]. In this configuration, the battery provides steady energy for cruising, while the supercapacitor handles transient power demands, such as sudden acceleration and regenerative braking. This division of labor reduces stress on the battery, enhances energy recovery, and improves the overall dynamic performance of the EV. Moreover, it contributes to extending the battery lifespan, increasing safety, and optimizing power flow during real-time driving scenarios [5].



Figure 1: PV based charger

Figure 1 is presenting the PV based energy storage system for the charging the electric vehicle. Optimal utilization of power resources, providing demand power permanently, operating fuel cell and PV panel in their optimum region are the main duties of control scheme [6].

An integral component of the HESS architecture is the Energy Management System (EMS), which intelligently controls the power distribution between the battery and supercapacitor. The EMS employs advanced control algorithms—such as fuzzy logic, rule-based control, or model predictive control (MPC)—to monitor and adjust energy flow based on parameters like speed, state of charge (SoC), driver input, and road conditions [7]. A well-optimized EMS ensures that energy is delivered efficiently, losses are minimized, and system stability is maintained, leading to superior performance and energy efficiency[8].

Recent advancements in simulation tools and embedded control systems have enabled researchers to develop, test, and validate hybrid energy storage models under a variety of load profiles and driving cycles[9]. These models have demonstrated significant improvements in acceleration time, reduced battery degradation, enhanced regenerative braking efficiency, and better thermal management compared to conventional battery-only systems. Additionally, integrating smart HESS into EV platforms can help in grid interaction for vehicle-to-grid (V2G) applications and renewable energy storage, thereby supporting the broader goals of smart mobility and clean energy systems[10].

In this research, we propose an optimized hybrid energy storage system that integrates LIBs and SCs, supported by an intelligent EMS, to significantly enhance EV performance. We focus on the design, modeling, and simulation of the HESS, evaluate its performance under real-time driving conditions, and compare it against conventional battery systems. The objective is to demonstrate how hybridization of energy storage, combined with intelligent power management, can pave the way for next-generation electric vehicles that are not only high-performing but also more durable and sustainable.

II. BACKGROUND

Y. Zhao et al. [1] proposed a robust tracking control design for hybrid battery-supercapacitor systems aimed at achieving improved energy flow control and system stability in electric vehicles. Their approach leverages robust nonlinear control techniques to ensure optimal power distribution and tracking performance under variable driving conditions. The study confirmed enhanced control precision, especially during acceleration and deceleration phases, contributing to the reliability of HESS.

H. Maghfiroh et al. [2] focused on optimal sizing and low-pass filter-based energy management strategies for EVs with hybrid energy storage systems. By optimizing the capacity ratio of batteries and supercapacitors, they reduced current stress on batteries and improved energy efficiency. Simulation results showed reduced battery degradation and improved lifespan, validating the effectiveness of their EMS design.

M. Al Takrouri et al. [3] conducted a comparative study of different HESS topologies for EV applications. Various configurations, including passive and active coupling structures, were analyzed for performance, complexity, and cost. Their analysis revealed that semi-active topologies offer a balance between cost and performance, making them suitable for mid-range EVs.

F. Noor et al. [4] introduced an adaptive barrier function sliding mode controller for a novel multisource HESS in EVs. This method provided strong robustness against parameter variations and external disturbances. Experimental validation demonstrated improved energy distribution, enhanced system stability, and significant reduction in peak power drawn from batteries.

S. M. R. Rostami and Z. Al-Shibaany [5] implemented an intelligent EMS using Teaching–Learning-Based Optimization (TLBO) integrated with fuzzy logic control for full-active HESS. The system dynamically adjusted power flow based on load demand and system state, leading to improved performance in variable driving conditions. Results indicated enhanced energy utilization and superior adaptability.

H. Maghfiroh et al. [6] also provided a comprehensive review of fuzzy logic controller applications in hybrid energy storage and hybrid electric vehicles. The review highlighted the effectiveness of fuzzy logic in handling system uncertainties and non-linearities. It also identified future research directions, including hybrid AI-based controllers for better performance.

B. Wang et al. [7] proposed an ultra-local model-based control method combined with a bus voltage supervisor for managing HESS in EVs. Their control strategy provided rapid response to voltage fluctuations and optimized energy sharing between battery and supercapacitor units, thus stabilizing the DC bus and improving driving comfort.

X. Chen et al. [8] focused on optimization of HESS with battery charging and swapping coordination, aiming at efficient energy distribution during long-distance travel and urban driving. The coordinated strategy improved system flexibility and reduced battery downtime, offering a practical approach for future EV infrastructure.

A. Mehraban et al. [9] utilized AI-based control techniques for managing storage capacity in high-power-density systems. Their system predicted and adjusted power allocation based on real-time demand, significantly improving energy efficiency and battery performance. The results showcased the benefits of incorporating AI for intelligent control in EV HESS.

F. Jiang et al. [10] designed a bidirectional DC–DC converter with zero current ripple and high voltage gain for EV HESS applications. The proposed converter provided efficient bidirectional energy flow and minimized EMI noise. Its compact design and high gain make it suitable for lightweight and space-constrained EVs.

B. Wang et al. [11] presented a three-level flowed converter with miscreant control for solar-assisted EVs with HESS. This system ensured high efficiency during solar charging and vehicle operation. It effectively managed the energy transition between solar panels, supercapacitors, and batteries, making it suitable for off-grid EV applications.

H. Moradisizkoohi et al. [12] developed a dual-input soft-switching DC converter for fuel-cell-based EVs integrated with HESS. Their experimental prototype demonstrated high efficiency and fast dynamic response during load variations. The system proved reliable for managing multiple energy sources in real-time applications.

Q. Xu et al. [13] proposed a regenerative braking control method based on electrical variable transmission for hybrid electric vehicles. Their system improved the energy recovery rate and ensured smoother transitions during braking events. This method supports energy conservation and battery stress reduction.

M. Asensio et al. [14] analyzed the efficiency and performance of semi-active HESS using battery-ultracapacitor combinations. Their study evaluated real-time driving cycles and control schemes, showing a 12–18% improvement in battery cycle life and a 10% increase in energy efficiency compared to battery-only systems.

Aldik et al. [15] presented a planning model for EV aggregators offering ancillary services using HESS. Their framework demonstrated how aggregated EV fleets can provide grid services while optimizing their own energy storage operations. This concept opens avenues for integrating HESS with smart grid infrastructures.

III. PROPOSED MODEL & METHODOLOGY

The proposed model and methodology description is as following-

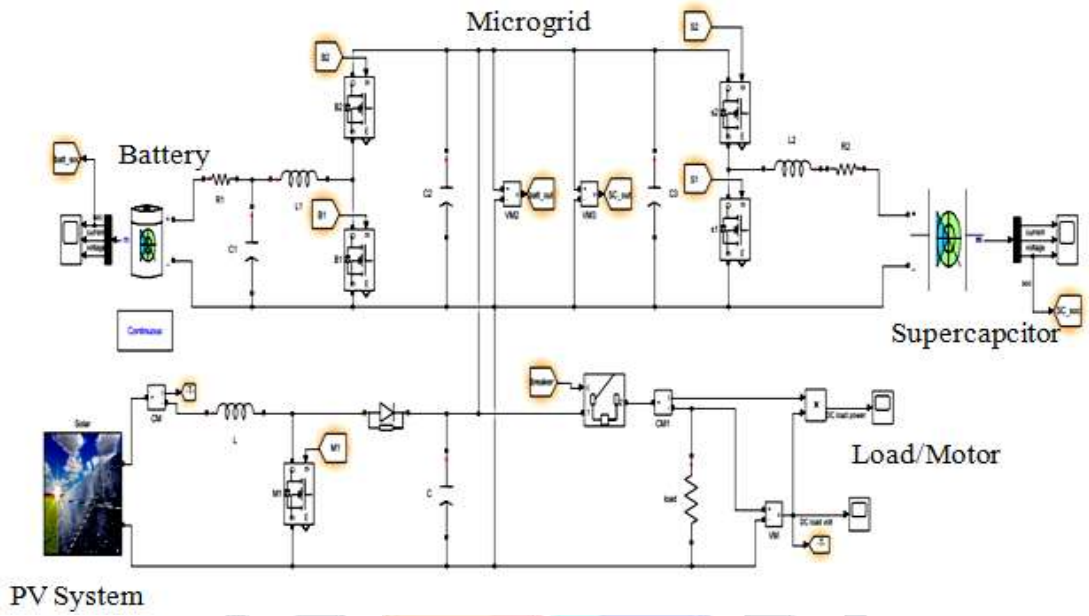

Figure 2: Proposed Model

Figure 2 is showing present HESS EV model. This model consist various sub models which is described in details. Proposed Hybrid Energy Storage System (HESS) Model integrated into a Microgrid environment for Electric Vehicle (EV) applications. The system consists of three main sources: a Battery, a Supercapacitor, and a Photovoltaic (PV) System, which collectively supply energy to a Load/Motor. Here is a component-wise explanation of the model:

1. Battery Unit: The battery is one of the primary energy storage sources. Connected through a DC-DC bidirectional converter that controls the charging and discharging process. Plays a key role in delivering steady energy during normal EV operation. The converter ensures power exchange between the battery and the DC bus of the microgrid.

2. Supercapacitor Unit: Supercapacitor is used to handle peak power demands (e.g., during acceleration or regenerative braking). Also connected through a bidirectional DC-DC converter. The converter manages fast energy exchange between the supercapacitor and the microgrid DC bus. Supercapacitor enhances system responsiveness and protects the battery from high current spikes.

3. PV System (Photovoltaic Source): Renewable source of energy integrated into the system. Connected via a DC-DC boost converter to regulate the fluctuating PV output. Charges the battery/supercapacitor or directly powers the load when solar energy is available. Supports energy sustainability and autonomy of the EV system.

4. Microgrid (DC Bus Integration): Serves as the central energy hub, collecting and distributing energy from the PV, battery, and supercapacitor. Multiple converters and switching devices coordinate the flow of energy. Ensures power balancing, voltage regulation, and system stability.

5. Load/Motor: Represents the EV drive motor or system load. Controlled using a motor controller/inverter that regulates speed and torque based on input from the HESS. Receives power from the combined battery-supercapacitor-PV system via the microgrid.

IV. SIMULATION RESULTS

The design and analysis of the proposed model is performed using MATLAB software with version 9.4.

Battery Discharging Mode- When the battery is fully charge then it supplies the power to the load or motor, so battery is in the discharging mode.

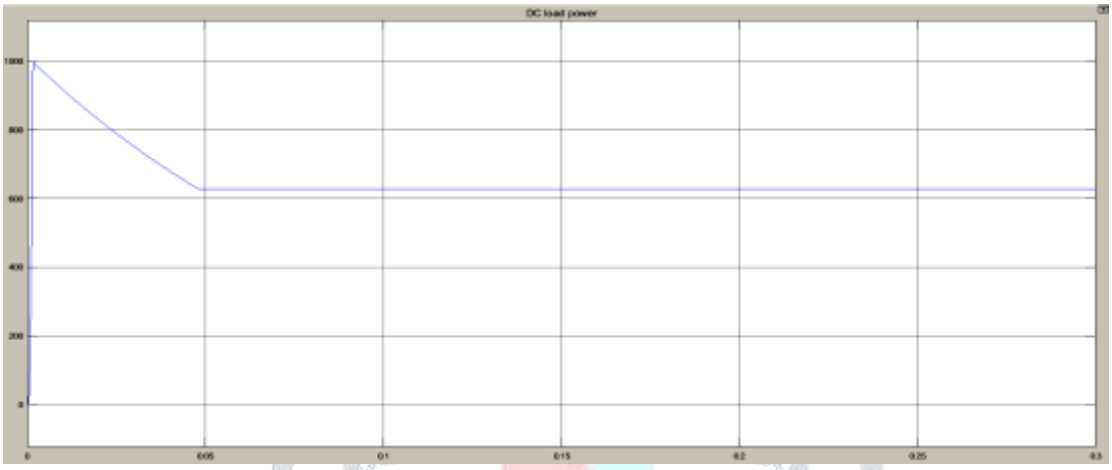

Figure 3: DC Load Power

Figure 3 is presenting the DC load power graph. The value of the DC load power is 630W.



Figure 4: Solar Power

Figure 4 is presenting the solar power graph. The collected solar power value is 600W.

Load Shedding Mode (LSM)- When the battery is fully discharge then the load is disconnected and battery is stop giving the power to the load.

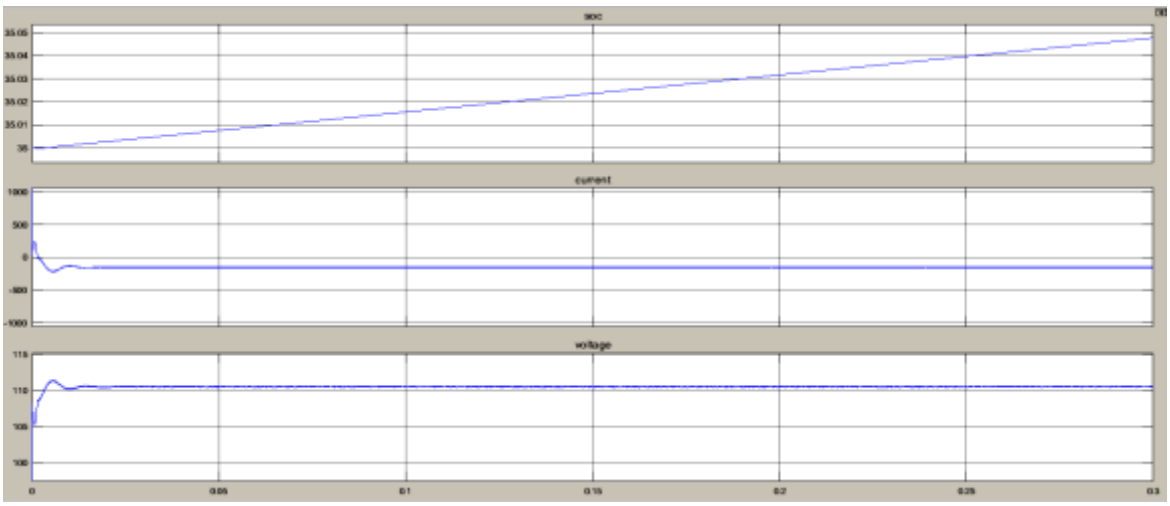

Figure 5: Battery Performance

Figure 5 is presenting the performance of the battery in terms of the state of charge, voltage and current. At the load shedding mode the state of charge of the battery is approx 30%.

Battery Charging Mode- As the battery is fully discharged, and then the solar power is start to charge the battery. Now battery charges up to the more than 80%

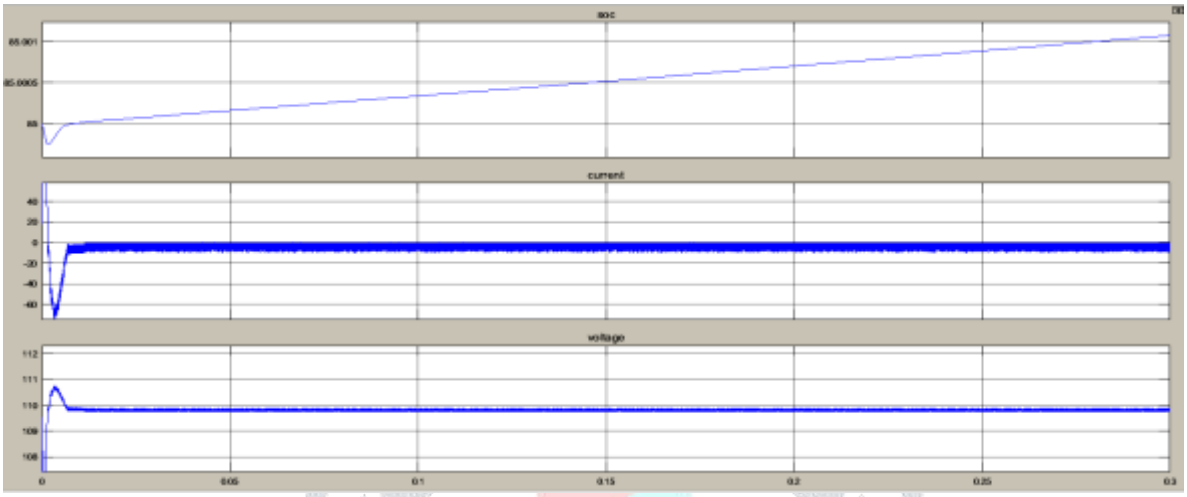

Figure 6: Battery performance

Figure 6 is presenting the battery performance during the charging state. The battery is charging and as completed charge, its start to give power to the load or motor.

Off-MPPT Mode- When the battery is fully charges then the MPPT is off. MPPT is used to track maximum power in the less time. After completion it off and when battery is discharge then it again present in the ON state.



Figure 7: MPPT output

Figure 7 is presenting the MPPT output, at the mode of off MPPT; it shows at the 0 state.

Table 1: Result Comparison

Sr No.	Parameters	Previous Work	Proposed Work
1	State of Charge (SOC)	80%	95%
2	Lithium-ion battery voltage	4V	12 V
3	Temperature (^{0}C)	43	35
4	Battery Current	60A	100A
5	Renewable Source	NA	Solar
6	Control technique	Particle Swarm–Nelder–Mead	MPPT

Table 1 presents a comparative analysis between the simulation results of the proposed and the previous models. In the proposed model, the overall state of charge (SOC) for both the battery and supercapacitor reaches approximately 95%, compared to 80% in the previous model. The proposed system also achieves a higher battery current of 100A, whereas the earlier model recorded only 60A. Additionally, the proposed model integrates a solar power system for energy generation, which was not considered in the previous approach. The use of the MPPT (Maximum Power Point Tracking) control technique in the proposed model offers a simpler and more efficient solution compared to the more

complex control method used previously. Based on these performance indicators, the proposed model demonstrates significant improvements in energy efficiency and control simplicity over the earlier model.

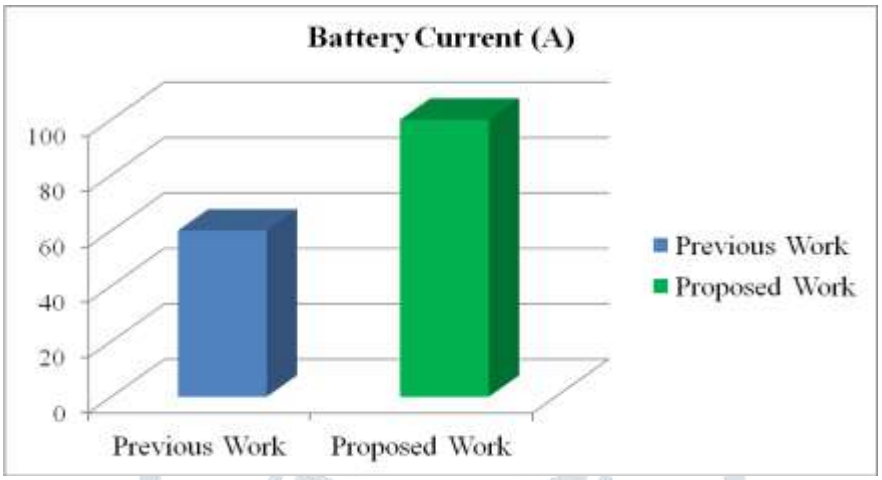

Figure 8: Result comparison

V. CONCLUSION

This research focuses on the design and performance analysis of a Hybrid Energy Storage System (HESS) for electric vehicle (EV) applications. The proposed system integrates two complementary energy sources: chemical batteries and ultracapacitors (supercapacitors), aiming to enhance overall energy efficiency and dynamic response. The inclusion of ultracapacitors provides additional storage capacity and supports high-power demands during peak load conditions, thereby reducing stress on the battery. The system is modeled and simulated using MATLAB/Simulink. The simulation results demonstrate a notable improvement in performance compared to conventional battery-only models, validating the effectiveness of the proposed HESS design.

REFERENCES

1. Y. Zhao, F. Qin and Z. Zhang, "Robust Tracking Control Design of Hybrid Battery-Supercapacitor Energy Storage System in Electric Vehicles," in *IEEE Transactions on Transportation Electrification*, vol. 11, no. 1, pp. 3262-3276, Feb. 2025, doi: 10.1109/TTE.2024.3436650.
2. H. Maghfiroh, O. Wahyunggoro and A. I. Cahyadi, "Optimal Sizing and Improved Low-Pass Filter Energy Management for Hybrid Energy Storage Electric Vehicles," in *IEEE Access*, vol. 12, pp. 180926-180938, 2024, doi: 10.1109/ACCESS.2024.3509481.
3. M. Al Takrouri *et al*., "A Comparison Study of Hybrid Energy Storage System Topologies for Electric Vehicles," in *IEEE Access*, vol. 12, pp. 171675-171688, 2024, doi: 10.1109/ACCESS.2024.3476513.
4. F. Noor, K. Zeb, S. Ullah, Z. Ullah, M. Khalid and A. Al-Durra, "Design and Validation of Adaptive Barrier Function Sliding Mode Controller for a Novel Multisource Hybrid Energy Storage System Based Electric Vehicle," in IEEE Access, vol. 12, pp. 145270-145285, 2024, doi: 10.1109/ACCESS.2024.3471893.
5. S. Mehdi Rakhtala Rostami and Z. Al-Shibaany, "Intelligent Energy Management for Full-Active Hybrid Energy Storage Systems in Electric Vehicles Using Teaching–Learning-Based Optimization in Fuzzy Logic Algorithms," in *IEEE Access*, vol. 12, pp. 67665-67680, 2024, doi: 10.1109/ACCESS.2024.3399111.
6. H. Maghfiroh, O. Wahyunggoro and A. I. Cahyadi, "Energy Management in Hybrid Electric and Hybrid Energy Storage System Vehicles: A Fuzzy Logic Controller Review," in *IEEE Access*, vol. 12, pp. 56097-56109, 2024, doi: 10.1109/ACCESS.2024.3390436.
7. B. Wang, H. Fan, Z. Li, G. Feng and Y. Han, "An Ultra-Local Model-Based Control Method With the Bus Voltage Supervisor for Hybrid Energy Storage System in Electric Vehicles," in *IEEE Journal of Emerging and Selected Topics in Power Electronics*, vol. 12, no. 1, pp. 461-471, Feb. 2024, doi: 10.1109/JESTPE.2023.3331374.
8. X. Chen, Y. Yang, J. Song, J. Wang and G. He, "Hybrid Energy Storage System Optimization With Battery Charging and Swapping Coordination," in *IEEE Transactions on Automation Science and Engineering*, vol. 21, no. 3, pp. 4094-4105, July 2024, doi: 10.1109/TASE.2023.3292189.
9. A. Mehraban, T. Ghanbari and E. Farjah, "AI-Based Control of Storage Capacity in High-Power-Density Energy Storage Systems, Used in Electric Vehicles," in *IEEE Transactions on Transportation Electrification*, vol. 10, no. 1, pp. 2293-2301, March 2024, doi: 10.1109/TTE.2023.3287357.
10. F. Jiang *et al*., "A Zero Current Ripple Bidirectional DC–DC Converter With High Voltage Gain and Common Ground for Hybrid Energy Storage System EVs," in *IEEE Journal of Emerging and Selected Topics in Power Electronics*, vol. 11, no. 5, pp. 4882-4894, Oct. 2023, doi: 10.1109/JESTPE.2023.3304364.
11. B. Wang, X. Zhang, U. Manandhar, H. B. Gooi, Y. Liu and X. Tan, "Bidirectional Three-Level Flowed Converter With Miscreant Control for HESS in Sun powered Helped Electric Vehicles," in IEEE Exchanges on Transportation Charge, vol. 5, no. 4, pp. 1190-1201, Dec. 2019, doi: 10.1109/TTE.2019.2939927.

12. H. Moradisizkoohi, N. Elsayad and O. A. Mohammed, "Trial Check of a Twofold Info Delicate Exchanged DC Converter for Power device Electric Vehicle With Half breed Energy Stockpiling Framework," in IEEE Exchanges on Industry Applications, vol. 55, no. 6, pp. 6451-6465, Nov.- Dec. 2019, doi: 10.1109/TIA.2019.2937288.
13. Q. Xu, F. Wang, X. Zhang and S. Cui, "Exploration on the Productivity Enhancement Control of the Regenerative Slowing mechanism of Crossover Electrical Vehicle In view of Electrical Variable Transmission," in IEEE Access, vol. 7, pp. 116823-116834, 2019, doi: 10.1109/ACCESS.2019.2936370.
14. M. Asensio, G. Magallán, G. Amaya and C. De Angelo, "Effectiveness and Execution Examination of Battery-Ultracapacitor based Semi-dynamic Mixture Energy Frameworks for Electric Vehicles," in IEEE Latin America Exchanges, vol. 16, no. 10, pp. 2581-2590, October 2018, doi: 10.1109/TLA.2018.8795138.
15. Aldik, A. T. Al-Awami, E. Sortomme, A. M. Muqbel and M. Shahidehpour, "An Arranging Model for Electric Vehicle Aggregators Offering Subordinate Types of assistance," in IEEE Access, vol. 6, pp. 70685-70697, 2018, doi: 10.1109/ACCESS.2018.2880443.

