A Modular Autonomous Rover for Real-Time Environmental Monitoring and Remote Navigation

Mrs. Kanupriya[1], Ananya Bharadwaj[2], Himanshu Ahalawat[3], Vishal Baliyan[4], Vishal [5]

Department ofElectronics and Communication Engineering,

Shri Ram Group of Colleges, Muzaffarnagar

ABSTRACT -This paper presents the design and implementation of a low-cost, modular autonomous rover capable of real-time environmental monitoring, intelligent navigation, and remote operation. The proposed system integrates a dual-controller architecture using Arduino for low-level control and ESP32 for high-level processing and wireless communication. The rover is equipped with multiple sensors, including ultrasonic, PIR, and temperature sensors, enabling obstacle detection, motion sensing, and environmental data acquisition.The system supports both manual and autonomous modes, allowing flexible operation based on application requirements. Real-time data transmission is achieved through Wi-Fi and Bluetooth connectivity, facilitating remote monitoring and control via mobile and cloud-based platforms. The modular design of the system ensures scalability and ease of integration with advanced technologies such as artificial intelligence and IoT-based analytics.Experimental evaluation demonstrates reliable performance in terms of terrain adaptability, obstacle avoidance, and communication efficiency. The proposed rover offers a cost-effective and scalable solution for applications in smart agriculture, environmental monitoring, security surveillance, and research exploration, thereby reducing human intervention in hazardous and inaccessible environments.

.

I.INTRODUCTION

An autonomous rover system is developed for real-time monitoring, data acquisition, and remote navigation using embedded and IoT-based technologies. The system utilizes a dual-controller architecture in which Arduinoperforms low-level control operations, while ESP32 manages wireless communication and

high-level processing. This integration enables efficient coordination between hardware control and data transmission.The rover incorporates multiple sensors for obstacle detection, motion sensing, and environmental monitoring, allowing it to interact with itssurroundings and respond accordingly. It operates in both manual and autonomous modes, providing flexibility in control through wireless interfaces such as Wi-Fi and Bluetooth. Real-time data transmission supports remote monitoring and system supervision via mobile or cloud-based platforms.

II.MOTIVATION AND SYSTEM REQUIREMENTS

The increasing demand for automation in real-world applications requires systems capable of performing monitoring and data acquisition tasks with minimal human intervention. A mobile rover system enables continuous monitoring and navigation in areas that are difficult or unsafe for human access. It provides the ability to traverse different terrains while collecting real-time data while Manual methods are often inefficient and time-consuming, especially inlarge-scale or remote environments.

Safety risks in hazardous environments

Manual inspection in rough terrains, restricted areas, or hazardous conditions exposes individuals to potential risks. Lack of automation limits safe operation in such environments. In scenarios such as high-temperature zones, polluted areas, or unstable terrains, human presence can lead to severe safety concerns.

Limitation of real time monitoring and data collection

Without autonomous systems, continuous data acquisition becomes difficult. This results in delayed decision-making and reduced system effectiveness. Manual data collection is often intermittent and lacks consistency, leading toincomplete or outdated information. The absence of real-time monitoring also restricts the ability to respond quickly to dynamic changes in the environment, reducing overall system responsiveness.

Increased human efforts and operational cost

In the absence of automated systems, monitoring tasks rely heavily on human involvement, increasing labor requirements, and operational expenses.Additionally,

continuous human supervision is required to ensure task completion, which further increases resource utilization. Over time, this leads to higher maintenance and operational costs, making manual systems less sustainable for long-term deployment.

III.LITERATURE REVIEW

Existing robotic systems in the field of mobile robotics include Arduino-based platforms, IoT-enabled smart rovers, surveillance robots, and agricultural monitoring systems. These systems demonstrate significant advancements in automation, sensing, and remote operation across various applications:

Limited Communication Capability

Low-cost robotic systems, particularly those based on Arduino, often rely on basic communication modules with limited range and bandwidth. These systems struggle to support real-time data transmission and continuous monitoring over long distances. As a result, remote operations become inefficient and unreliable.

High Cost and System Complexity

Advanced robotic systems with IoT integration provide improved performance and connectivity but come at a significantly higher cost. These systems often require powerful processors, additional hardware modules, and complex software frameworks. Consequently, such solutions are less suitable for low-cost deployments and academic research applications.

Lack ofAutonomous decision-making capability

Many robotic systems operate primarily in manual or semi-automatic modes with minimal autonomous functionality. This increases human intervention and reduces system efficiency in real-time applications. The absence of intelligent decision-making limits their effectiveness in complex or unpredictable environments.

Poor terrain adaptability

A significant number of robotic platforms are optimized for indoor or smooth surface operation. These systems often fail to maintain stability and traction when deployed on uneven or rugged terrains. In outdoor conditions, performance issues such as slippage, imbalance, and reduced mobility are commonly observed. This limits their applicability in real-world field environments.

IV.PROPOSED SYSTEM

1. System Architecture

A distributed embedded framework integrates sensing, control, and communication modules to enable real-time monitoring and autonomous navigation. The system employs a dual-controller configuration in which the Arduino microcontroller performs low-level operations such as sensor interfacing and motor control,

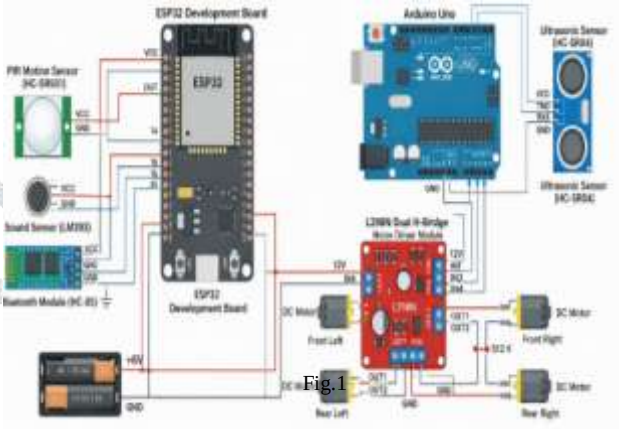

Fig.1

Multiple sensors, including ultrasonic, PIR, and temperature sensors, are interfaced to continuously acquire environmental data. The acquired data is processed by the control unit to generate appropriate control signals for navigation and obstacle avoidance. These signals are transmitted to the motor driver module, which regulates the motion of the rover.



Fig.2

Wireless communication is achieved through the ESP32 module using Wi-Fi and Bluetooth protocols, enabling real-time data transmission and remote system control. This facilitates continuous monitoring and interaction through external interfaces such as mobile or cloud-based platforms.The operational flow follows a sequential process of data acquisition, processing, decision-making, and actuation, along with parallel communication to external systems.

2. Hardware Requirements

Component	Quantity	Purpose
Arduino	1	Main controller
ESP32	1	Wireless communication & additional control
DC Motor	4	Locomotion
Motor Driver	1	Motor control
Li-ion Battery	4	Power supply
PIR Sensor	1	Motion detection
Temperature Sensor	1	Environmental measurement
Ultrasonic Sensor	1	Distance measurement & obstacle avoidance
Bluetooth Module	1	Manual/automatic control

Table.1

3. Working Principle

The operation of the proposed Astro Rover is based on the coordinated interaction between sensing, processing, control, and communication modules. The system continuously acquires environmental data through onboard sensors, including ultrasonic sensors for distance measurement, PIR sensors for motion detection, and temperature sensors for monitoring environmental conditions.

The sensor data is processed by the Arduino microcontroller, which executes control logic to determine the appropriate action based on real-time inputs. In the presence of obstacles, the system initiates corrective navigation by altering the direction or stopping the rover to ensure safe movement. The processed control signals are transmitted to the motor driver module, which regulates the motion of the motors for forward, backward, or directional movement.

Simultaneously, the ESP32 module manages wireless communication by transmitting system data to external interfaces using Wi-Fi or Bluetooth. It also enables remote operation by receiving user commands, allowing the rover to function in manual mode. In autonomous mode, the rover operates independently based on sensor inputs without requiring external intervention.



Fig.3

The overall system follows a continuous operational loop consisting of data acquisition, processing, decision-making, and actuation,ensuring real-time responsiveness and efficient navigation.

4. Modes Of Operation

The proposed system operates in two primary modes: manual mode and autonomous mode, allowing flexibility in control based on application requirements.

Manual Mode

In manual mode, the rover is controlled by the user through wireless communication using Bluetooth or Wi-Fi. Commands are sent from a mobile device and executed by the system in real time, allowing precise control over movement and direction.

Autonomous Mode

In autonomous mode, the rover operates independently based on sensor inputs. The system continuously monitors the environment and makes decisions for navigation and obstacle avoidance without human intervention. This mode enhances efficiency and reduces dependency on manual control.

V.RESULT AND DISCUSSION

System Performance Evaluation

- The Astro Rover was successfully implemented and tested under various operating conditions.
- The system demonstrated stable movement and navigation capabilities.
- Real-time response was achieved through efficient coordination between sensors and controllers.

Obstacle Detection and Navigation

- The ultrasonic sensor accurately detected obstacles in the rover's path.
- The system effectively avoided collisions by altering direction or stopping.
- Smooth navigation was observed in both manual and autonomous modes.

Sensor Performance Analysis

- PIR sensor successfully detected motion in the surrounding environment.
- Temperature sensors provide consistent and reliable environmental readings.

Communication and Control Efficiency

- ESP32 enabled reliable wireless communication using Wi-Fi and Bluetooth
- Remote monitoring and control were achieved with minimal delay
- Stable data transmission was observed.

Overall System Reliability

- The rover operates efficiently in both manual and autonomous modes.
- Continuous data acquisition and processing ensure real-time system response.
- The system demonstrated reliable performance under practical conditions.

VI.APPLICATIONS

The proposed Astro Rover system can be utilized in multiple real-world applications requiring autonomous monitoring and mobility.

Smart Agriculture

The rover can be used for monitoring soil and environmental conditions in agricultural fields. It enables real-time data collection, reducing manual effort, and improving crop management efficiency.

Environmental Monitoring

The system can operate in remote or polluted areas to monitor environmental parameters such as temperature and motion, ensuring continuous data acquisition without human intervention.

Security and Surveillance

The rover can be deployed for surveillance in restricted or sensitive areas. Its motion detectioncapability enhances security by identifying unauthorized activity.

Disaster Management

In hazardous environments such as fire-affected or unstable regions, the rover can be used for inspection and monitoring, reducing risks to human life.

VIII. FUTURE SCOPE AND ENHANCEMENTS

The proposed Astro Rover system provides a strong foundation for autonomous monitoring and navigation; however, several enhancements can be incorporated to further improve its performance, intelligence, and applicability in real-world scenarios.

Integration of Artificial Intelligence

The system can be enhanced by incorporating artificial intelligence and machine learning algorithms to enable intelligent decision-making and adaptive navigation. This would allow the rover to analyze environmental patterns and optimize its movement dynamically.

GPS-Based Navigation System

Integration of GPS modules can enable real-time location tracking and path planning. This would enhance the rover's capability for long-distance navigation and make it suitable for large-scale outdoor applications.

Camera and Image Processing

The addition of camera modules along with image processing techniques can enable real-time video monitoring and object detection. This feature would significantly improve surveillance and inspection capabilities.

Solar Power Integration

The system can be made energy-efficient by incorporating solar panels for power generation. This would extend operational time and make the rover suitable for long-duration deployment in remote areas.

IX. CONCLUSION

The autonomous rover designed in this project offers a low-cost and efficient solution for remote monitoring, mobility, and data collection in outdoor environments. By integrating Arduino, ESP32, and multiple sensors, the system supports real-time communication, obstacle detection, and controlled navigation without frequent human involvement. Its ability to operate on uneven terrains makes it suitable for applications where manual inspection is difficult or time consuming. The proposed rover demonstrates how embedded systems and wireless connectivity can improve automation, safety, and reliability in various domains. With further enhancements in intelligence,

power management, and communication, the rover can evolve into a scalable platform for advanced robotic applications.

The proposed system highlights the potential of integrating embedded systems with wireless communication to develop cost-effective and scalable autonomous solutions for real-world applications.

X. REFERENCES

1. *Venu, N., "IoT Surveillance Robot Using ESP-32 Wi-Fi CAM & Arduino," International Journal, 2022.*

2. *Jaman, M. A., et al., "DisasterX: An IoT-Based Robotic Rover with ESP32-CAM for Real-Time Disaster Intervention," IEEE Conference, 2025.*

3. *Vimal, M., et al., "Design and Implementation of an IoT-Enabled Rover with ESP32 CAM for Object Detection and Monitoring," ICMSCI, 2025.*

4. *García-González, J., et al., "Automated Data Collection Systems Using Arduino and ESP32 Architectures," Electronics Journal, 2025.*

5. *J. García-González et al., "Automated Data Collection Systems Using Arduino and ESP32 Architectures," Electronics Journal, 2025.*

6. *A. Ahmed et al., "Design and Implementation of IoT-Based Robotic Systems Using Arduino and ESP32," IJECE, 2021.*

7. *H. B. Jatiyoso et al., "PIR Sensor-Based IoT Monitoring System Using ESP32,"*